SOVEREIGN
EASY GARDENING

1200W ELECTRIC ROTARY LAWN MOWER

Article No. 660843

Model No. GLM32G

Technical Support & Parts
01904 727509
Mon-Fri 9am-5pm Sat-Sun 11am-4pm
www.coreservice.co.uk

ORIGINAL INSTRUCTION MANUAL

Please read these instructions fully before starting assembly.

HHGL Limited, MK9 1BA; HHGL (ROI) Limited, D02 X576 Oct. 2023

CONTENTS

General safety warnings	3
Intended use	10
Warning symbols	11
In the box	13
Assembling the lawn mower	14
Operating the lawn mower	17
Maintenance and storage	21
Troubleshooting	24
Technical data	26
Recycling and disposal	28
Getting help	28
Warranty	29

GENERAL SAFETY WARNINGS

SAFETY WARNINGS

WARNING! Read all safety warnings, instructions, illustrations and specifications provided with this power tool.

Failure to follow all instructions listed below may result in electric shock, fire and/or serious injury.

Save all warnings and instructions for future reference.

The term "power tool" in the warnings refers to your mains-operated (corded) power tool or battery-operated (cordless) power tool.

WORK AREA SAFETY

- **Keep work area clean and well lit.** Cluttered or dark areas invite accidents.
- **Do not operate power tools in explosive atmospheres, such as in the presence of flammable liquids, gases or dust.** Power tools create sparks which may ignite the dust or fumes.
- **Keep children and bystanders away while operating a power tool.** Distractions can cause you to lose control.

ELECTRICAL SAFETY

- **Power tool plugs must match the power outlet. Never modify the plug in any way. Do not use any adapter plugs with earthed (grounded)**

power tools. Unmodified plugs and matching power outlets will reduce the risk of electric shock.

- **Avoid body contact with earthed or grounded surfaces, such as pipes, radiators, ranges and refrigerators.** There is an increased risk of electric shock if your body is earthed or grounded.
- **Do not expose power tools to rain or wet conditions.** Water entering a power tool will increase the risk of electric shock.
- **Do not abuse the cord. Never use the cord for carrying, pulling or unplugging the power tool. Keep cord away from heat, oil, sharp edges or moving parts.** Damaged or entangled cords increase the risk of electric shock.
- **When operating a power tool outdoors, use an extension cord suitable for outdoor use.** Use of a cord suitable for outdoor use reduces the risk of electric shock.
- **If operating a power tool in a damp location is unavoidable, use a residual current device (RCD) protected supply.** Use of an RCD reduces the risk of electric shock.

PERSONAL SAFETY

- **Stay alert, watch what you are doing and use common sense when operating a power tool. Do not use a power tool while you are tired or under the influence of drugs, alcohol or medication.** A moment of inattention while operating power tools may result in serious

personal injury.

- **Use personal protective equipment. Always wear eye protection.** Protective equipment such as a dust mask, non-skid safety shoes, hard hat or hearing protection used for appropriate conditions will reduce personal injuries.
- **Prevent unintentional starting. Ensure the switch is in the off-position before connecting to a power source and/or battery pack, picking up or carrying the tool.** Carrying power tools with your finger on the switch or energising power tools that have the switch on invites accidents.
- **Remove any adjusting key or wrench before turning the power tool on.** A wrench or a key left attached to a rotating part of the power tool may result in personal injury.
- **Do not over-reach. Keep proper footing and balance at all times.** This enables better control of the power tool in unexpected situations.
- **Dress properly. Do not wear loose clothing or jewellery. Keep your hair and clothing away from moving parts.** Loose clothes, jewellery or long hair can be caught in moving parts.
- **If devices are provided for the connection of dust extraction and collection facilities, ensure these are connected and properly used.** Use of dust collection can reduce dust-related hazards.
- **Do not let familiarity gained from frequent use of tools allow you to become complacent and ignore tool safety principles.** A careless

action can cause severe injury within a fraction of a second.

POWER TOOL USE AND CARE

- **Do not force the power tool. Use the correct power tool for your application.** The correct power tool will do the job better and safer at the rate for which it was designed.
- **Do not use the power tool if the switch does not turn it on and off.** Any power tool that cannot be controlled with the switch is dangerous and must be repaired.
- **Disconnect the plug from the power source and/or remove the battery pack, if detachable, from the power tool before making any adjustments, changing accessories, or storing power tools.** Such preventive safety measures reduce the risk of starting the power tool accidentally.
- **Store idle power tools out of the reach of children and do not allow persons unfamiliar with the power tool or these instructions to operate the power tool.** Power tools are dangerous in the hands of untrained users.
- **Maintain power tools and accessories. Check for misalignment or binding of moving parts, breakage of parts and any other condition that may affect the power tool's operation. If damaged, have the power tool repaired before use.** Many accidents are caused by poorly

maintained power tools.

- **Keep cutting tools sharp and clean.** Properly maintained cutting tools with sharp cutting edges are less likely to bind and are easier to control.
- **Use the power tool, accessories and tool bits etc. in accordance with these instructions, taking into account the working conditions and the work to be performed.** Use of the power tool for operations different from those intended could result in a hazardous situation.
- **Keep handles and grasping surfaces dry, clean and free from oil and grease.** Slippery handles and grasping surfaces do not allow for safe handling and control of the tool in unexpected situations.

SERVICE

Have your power tool serviced by a qualified repair person using only identical replacement parts. This will ensure that the safety of the power tool is maintained.

LAWN MOWER SAFETY WARNINGS

- **Do not use the lawn mower in bad weather conditions, especially when there is a risk of lightning.** This decreases the risk of being struck by lightning.
- **Thoroughly inspect the area for wildlife where the lawn mower is to be used.** Wildlife may be injured by the lawn mower during operation.

- **Thoroughly inspect the area where the lawn mower is to be used and remove all stones, sticks, wires, bones, and other foreign objects.** Thrown objects can cause personal injury.
- **Before using the lawn mower, always visually inspect to check that the blade and the blade assembly are not worn or damaged.** Worn or damaged parts increase the risk of injury.
- **Before use, check the supply cord and any extension cord for signs of damage or aging. Do not use the lawn mower if the cord is damaged or worn. If the cord is damaged or worn during use, switch off the lawn mower and do not touch the cord before disconnecting it from the supply.** A damaged supply cord or extension cord may result in electric shock, fire and/or serious injury.
- **Check the grass catcher frequently for wear or deterioration.** A worn or damaged grass catcher may increase the risk of personal injury.
- **Keep guards in place, guards must be in working order and be properly mounted.** A guard that is loose, damaged, or is not functioning correctly may result in personal injury.
- **Keep all cooling air inlets clear of debris.** Blocked air inlets and debris may result in overheating or risk of fire.
- **While operating the lawn mower, always wear non-slip and protective footwear. Do not operate the lawn mower when barefoot**

or wearing open sandals. This reduces the chance of injury to the feet from contact with the moving blade.

- **While operating the lawn mower, always wear long trousers.** Exposed skin increases the likelihood of injury from thrown objects.
- **Do not operate the lawn mower on wet grass. Walk, never run.** This reduces the risk of slipping and falling which may result in personal injury.
- **Do not operate the lawn mower on excessively steep slopes.** This reduces the risk of loss of control, slipping and falling which may result in personal injury.
- **When working on slopes, always be sure of your footing, always work across the face of slopes, never up or down. Always exercise extreme caution when changing direction.** This reduces the risk of loss of control, slipping and falling, which may result in personal injury.
- **Use extreme caution when reversing or pulling the lawn mower towards you. Always be aware of your surroundings.** This reduces the risk of tripping during operation
- **Keep the supply cord away from the cutting blades.** A damaged supply cord may result in electric shock, fire and/or serious injury.
- **Switch off and remove the plug from mains if the cord is entangled or damaged.** Entangled or damaged cords can increase the risk of electric shock.

- **Do not touch blades and other hazardous moving parts while they are still in motion.** This reduces the risk of injury from moving parts.
- **When clearing jammed material or cleaning the lawn mower, make sure all power switches are off and the power cord is disconnected.** Unexpected operation of the lawn mower may result in serious personal injury.

INTENDED USE

This lawn mower has been designed for cutting grass. It should only be used for its prescribed purpose, and any other use is deemed to be a case of misuse.

NOTE: Our equipment has not been designed for use in commercial, trade or industrial applications. Our warranty will be voided if the lawn mower is used in commercial, trade or industrial businesses or for equivalent purposes.

WARNING SYMBOLS

SAFETY SYMBOLS

The purpose of safety symbols is to attract your attention to any possible dangers. The safety symbols and their explanations require your careful attention and full understanding. The symbol warnings do not, by themselves, eliminate any danger. The instructions and warnings they give are no substitute for proper accident prevention measures.

WARNING: Be sure to read and understand all safety instructions within this operator's manual, including all safety alert symbols such as '**DANGER**', '**WARNING**', and '**CAUTION**' before using this tool. Failure to follow all instructions listed below may result in electric shock, fire and/or serious personal injury.

SAFETY ALERT SYMBOLS: Indicate **DANGER**, **WARNING**, or **CAUTION** and may be used in conjunction with other symbols or pictographs.

SYMBOL MEANINGS

This page depicts and describes safety symbols that may appear on this product. Read, fully understand and follow all instructions on the lawn mower before attempting to assemble and operate.

To reduce the risk of injury, the user must read this instruction manual carefully.

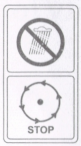

Avoid using the tool in the rain.

Blade continues to rotate after the machine is switched off. Wait until all machine components have completely stopped before touching them.

Keep bystanders away. Objects thrown by the product could hit the user or other bystanders. Always ensure that other people and pets remain at a safe distance from the product when it is in operation.

Beware of sharp blades. Blades continue to rotate after the motor is switched off. Remove the safety key before performing any maintenance tasks.

Keep the supply cord away from the blades

Guaranteed sound power level value is 96dB.

Wear ear protection, eye protection and gloves (PPE) when using the product.

WEEE symbol. Waste electrical products should not be disposed of with household waste. Please recycle where facilities exist. Check with your local authority or local store for recycling guidelines.

CE

The product complies with the applicable European Directives, and an evaluation method of conformity for these directives was done.

UK CA

The product complies with the applicable UK Directives, and an evaluation method of conformity for these directives was done.

IN THE BOX

Parts

1. Upper handle
2. Bolts x 2
3. Wing nuts x 2
4. Lower handles x 2
5. Transportation handle
6. Motor housing
7. Screws x 2
8. Grass box
9. Grass full indicator
10. Cable
11. Cable clips x 2
12. 10m cable
13. Lock-off button
14. Switch bar

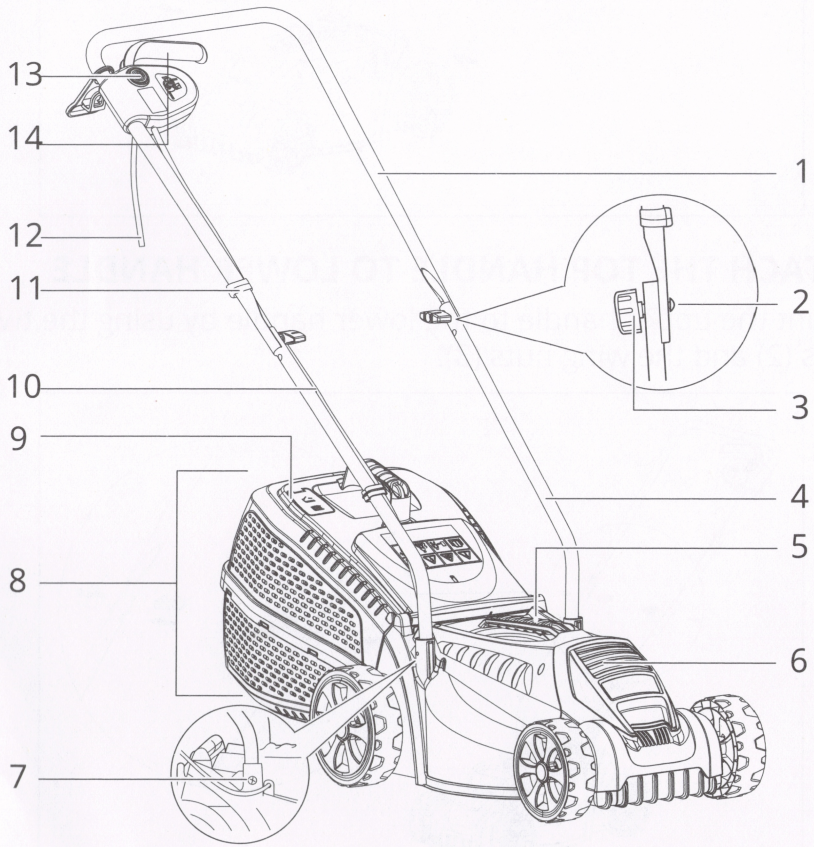

ASSEMBLING THE LAWN MOWER

ASSEMBLE THE LOWER HANDLE

1. Insert the lower handle into the slot on the mower deck.
2. Use two installation screws (7) to fix the lower handle.

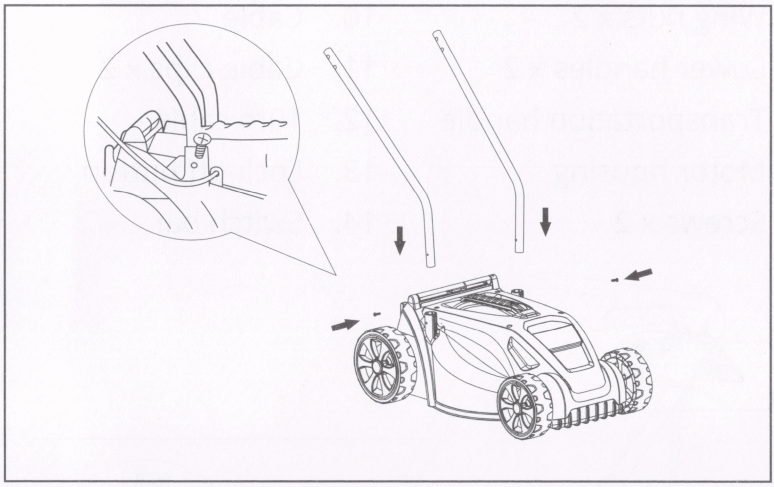

ATTACH THE TOP HANDLE TO LOWER HANDLE

Mount the upper handle to the lower handle by using the two bolts (2) and the wing nuts (3).

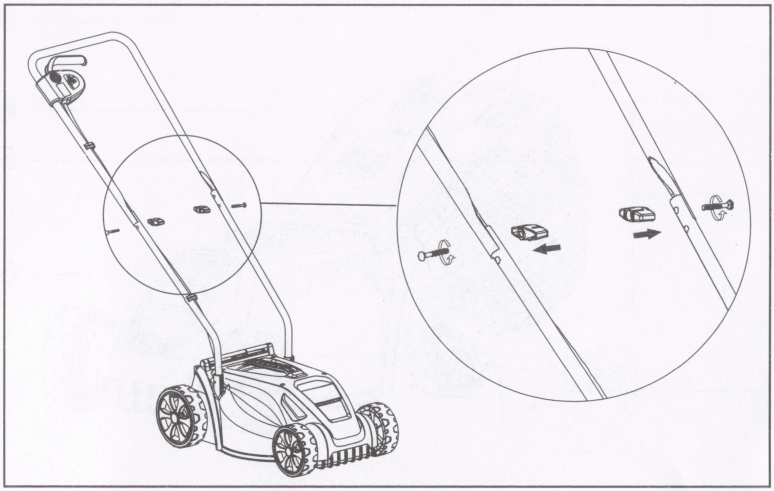

FITTING THE CABLE CLIP

Secure the cable against the handle with the supplied cable clip (11). Ensure the cable is clipped into the cable clip.

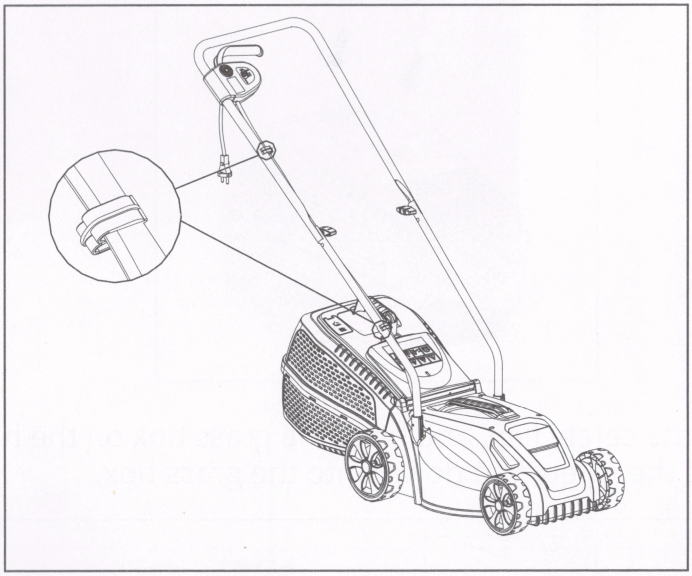

MOUNTING THE GRASS BOX

1. Fit the upper part onto the lower part, by fixing all the outer clips correctly.

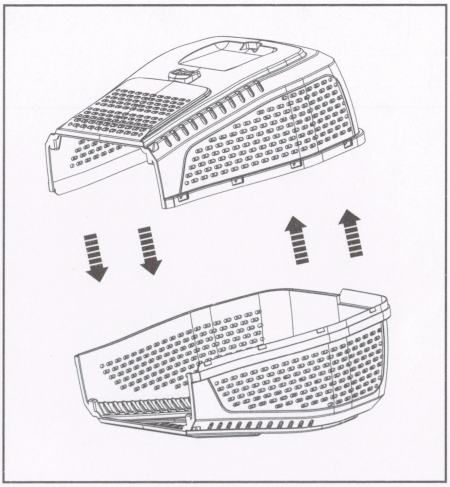

2. Fit the transportation handle (5) onto the top of the grass box, so that it clicks into place.

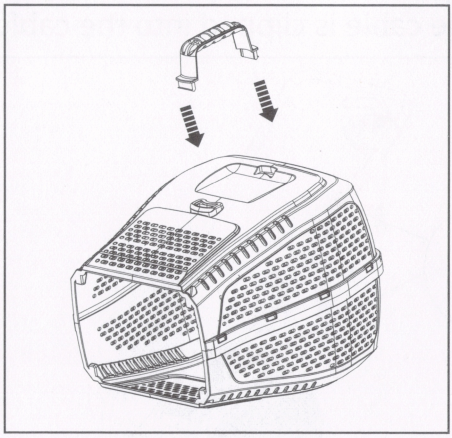

3. Lift the safety flap, and hang the grass box on the hook. Fold the safety flap down onto the grass box.

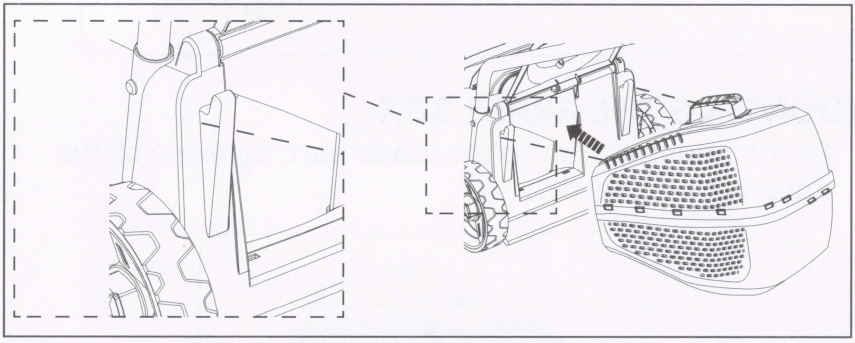

OPERATING THE LAWN MOWER

WARNING!

The lawn mower is intended for use by adults. Children or other people who are unfamiliar with the operating instructions must not use the lawn mower. The operator or user is responsible for any accidents or damage to other persons or their property.

CUTTING HEIGHT ADJUSTMENT

Adjust the cutting height according to the needs of your lawn.The cutting height depends on the kind of lawn and its actual height. When mowing high grass, start with the maximum cutting height and make a second cut with a lower cutting height.

1. Remove the plug from the main power source.
2. Pull the rear and front shaft out and place them into the correct slot for the desired cutting height.
3. Make sure that the rear and front shaft are at the same level.

NOTE! Always ensure the lever clicks back into the slot.

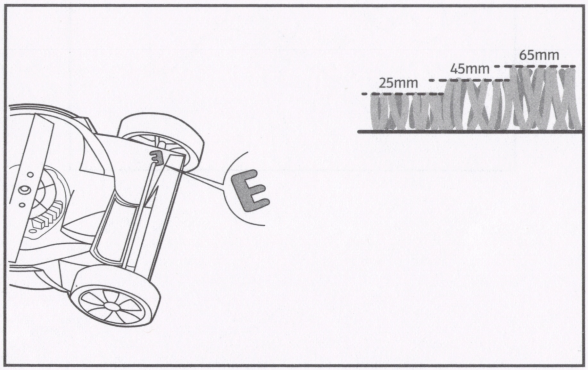

CONNECTING TO THE POWER SUPPLY

WARNING! For your safety, the extension cable must be suitable for outdoor use with sockets that are protected against splashing water!

Extension cords that are safe to use are:

1. Double the extension cable about a foot from the end. Hook the loop over the cable strain.

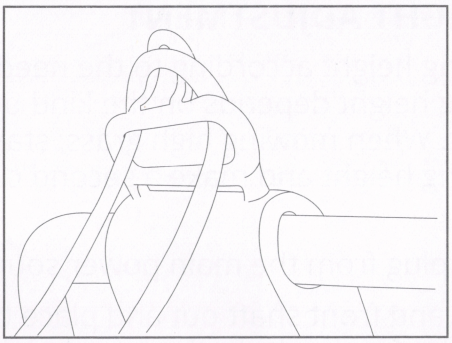

2. Connect the plug to the mains socket.

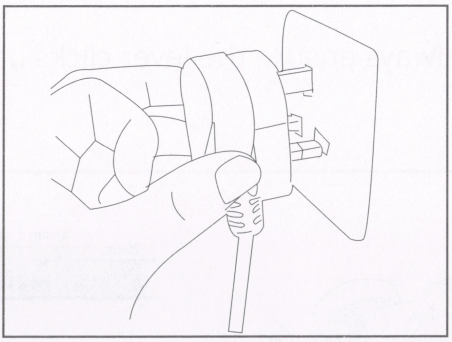

SWITCHING ON/OFF

1. To switch on, press the lock-off button, and squeeze the switch bar towards the handle, release the lock-off button
2. To switch off, release the switch bar.

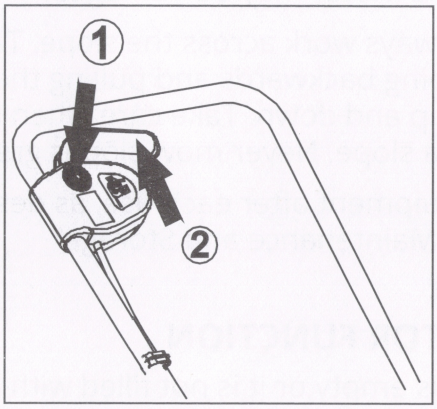

WARNING: When the motor has been switched off, the blade will continue to run for several seconds. Do not touch the underside of the mower until the cutter has come to a complete standstill.

WORKING WITH THE LAWN MOWER

Regular mowing encourages increased foliation of the grass and kills off weeds at the same time.

Therefore, not only does each mowing increase the density of the lawn, it also produces an evenly resilient lawn, The first cut is to be made in around April, at a growth height of 70~80mm. In the main vegetation period, the lawn is to be mowed at least once a week.

- Run the equipment at a walking pace, in tracks that are as even as possible. For gap-free mowing, the tracks should always overlap by a few centimetres.
- Watch for holes, ruts, rocks, hidden objects or bumps which could cause you to slip or trip. Tall grass can hide

obstacles. Be aware of footing when mowing near drops, ditches and embankments.

- Avoid mowing wet grass. There is a fall risk. Adjust the cutting height so the equipment is not overloaded. Otherwise, the motor may be damaged.
- On slopes, always work across the slope. Take particular care when going backwards and pulling the equipment. Never mow up and down. Take care when changing direction on a slope. Never mow slopes greater than 15°.
- Clean the equipment after each use, as described in the chapter on " Maintenance and Storage".

FULL INDICATOR FUNCTION

If the grass box is empty or it is not filled with grass, the grass full indicator will be open. If the grass box is filled with grass the grass full indicator will be closed.

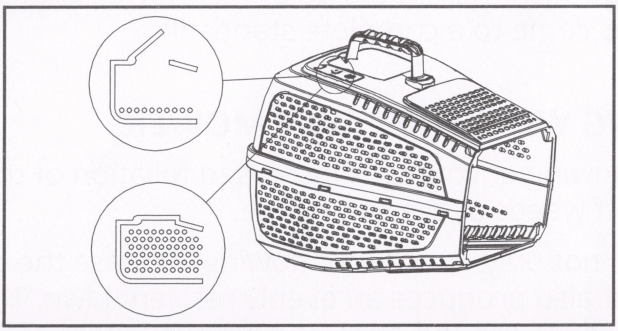

EMPTYING THE GRASS BOX

When the grass box indicator closes, this is a sign that you should empty the grass box.

NOTE: Before taking off the grass box, switch off the mower and wait until the blade has come to a complete stop.

To take off the grass box, use one hand to lift up the safety flap and the other to grab onto the carry handle. The safety flap automatically falls down after removing the grass box and closes off the rear chute opening.

Empty out the grass box then refit to the lawn mower.

NOTE: If any grass residue is caught in the discharge chute, clean it using a brush. Do not remove grass debris from the mower casing or the blade by hand or with your feet. Instead use suitable tools, such as a brush or broom. To ensure that the cut grass can be collected into the grass box, the discharge opening and inside the mower casing must be cleared of any blockages.

MAINTENANCE AND STORAGE

WARNING!

Before performing any maintenance or cleaning work, always ensure that the main power has been removed. Wait until the blade has stopped completely and the lawn mower has cooled down.

CLEANING THE PRODUCT

- Use a soft brush to remove accumulated dust and debris. Wear safety glasses to protect your eyes whilst cleaning.
- Wipe down the product enclosure with a slightly damp cloth. Do not spray the unit with water. Water may destroy the switch unit and the electric motor.

MAINTENANCE

NOTE: Always wear gardening gloves when working with sharp blades.

1. Keep all nuts, bolts and screws tight to ensure that the machine is in a safe working condition.
2. Check the grass box frequently for wear or deterioration.
3. Examine the machine and replace worn or damaged parts for safety.

REMOVING/INSTALLING THE BLADE

1. Use the correct size wrench to uninstall the blade bolt nut.
2. Wearing heavy gloves, hold the blade still and turn the wrench anti-clockwise to remove the bolt.
3. Fit the replacement blade correctly with marks facing up and align the pegs. Refit the bolt and retighten securely to torque 20N.m.

WARNING: Replace or re-sharpen the mower blade at the end of the season. Always have the mower blade re-sharpened or replaced by a recommended service centre.

Unbalanced blades will cause the lawn mower to vibrate violently, which can increase the risk of accidents occurring.

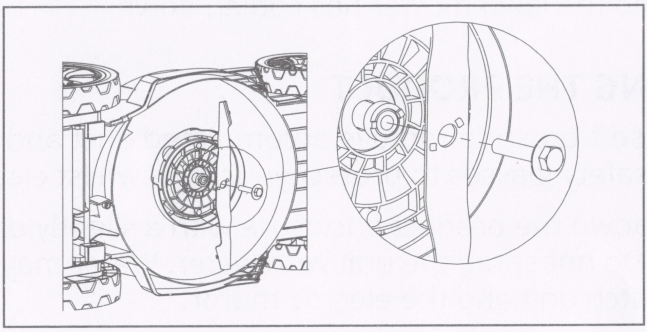

UK PLUG

If you need to replace the fitted plug, then follow the instructions below.

IMPORTANT: The wires in the mains lead are coloured in accordance with the following code:

Blue – Neutral, Brown – Live

As the colours of the wire in the mains lead of this product may not correspond with the coloured markings identifying the terminals in your plug, proceed as follows: The blue wire must be connected to the terminal marked N or coloured black. The brown wire must be connected to the terminal marked L or coloured red.

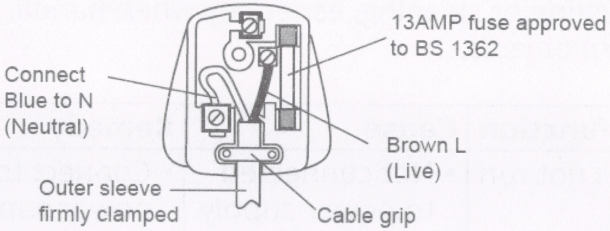

WARNING!

Never connect live or neutral wires to the earth terminal of the plug.

Only fit an approved 13 Amp BS 1363 or BS 1363/A plug and the correctly rated fuse. If in doubt, consult a qualified electrician.

STORAGE AND TRANSPORT

STORAGE

After cleaning the unit thoroughly, store in a cool dry place out of the reach of children.

NOTE: Ensure cables are not trapped when folding/unfolding the handle. If stored vertically, make sure the mower is positioned in a corner so that the blade is facing inwards

against a wall and the machine is secure, to prevent it falling over.

TRANSPORT

Use the original packaging whenever possible.

TROUBLESHOOTING

WARNING: Before performing any repair work, ensure that the battery pack has been removed.

WARNING: Always wear heavy-duty gloves when adjusting or cleaning, especially when handling sharp objects.

Fault/malfunction	Cause	Remedy
Motor does not run	• Not connected to power supply • Grass is too long, wrapped around the blade • Mower housing clogged with grass and debris • Cutting too much grass	• Connect to power supply • Start on short grass or on an area which has already been mown • Clean discharge channel/housing (the mowing blade must rotate freely) • Correct the cutting height

Motor power drops	• Cutting too much grass • Mower housing clogged with grass and debris • Cutting blade worn or rusty • The grass box is full	• Correct the cutting height • Clean discharge channel/housing (the mowing blade must rotate freely) • Replace the mower cutter blade-see maintenance section • Ensure the grass box is empty
Grass box is not filled sufficiently	• Cutting too much grass • The lawn is too wet • Cutting blade worn or rusty • Air vents on the grass box are blocked • Mower housing clogged with grass and debris	• Correct the cutting height • Allow the lawn to dry • Replace the mower cutter blade, see maintenance section • Clean the vents on the grass box • Clean the discharge channel /housing

TECHNICAL DATA

Model no.	GLM32G
Input voltage rating	230-240~, 50Hz
Rated power	1200W
No load speed	3500 /min
Cutting width	32cm
Cutting height	25-65mm
Grass bag capability	30L
Protection class	Class II
Degree of protection	IPX4
Weight	8.5kg

Sound values
Sound pressure level L_{pA}: 78.5dB(A)
Sound power level L_{WA}: 91.14dB(A)
Uncertainty K: 3dB(A)
Guaranteed sound power level L_{WA}: 96dB(A)
Vibration values
Hand arm vibration a_h: 2.268m/s^2
Uncertainty K: 1.5m/s^2

The sound intensity level for the operator may exceed 80 dB(A) and ear protection measures are necessary.

The declared vibration value has been measured in accordance with a standard test method (according to EN 62841) and may be used for comparing one product with another. The declared vibration value may also be used in a preliminary assessment of exposure.

WARNING: The vibration emission value during actual use of the power tool can differ from the declared value, depending on the ways in which the tool is used. Values are dependant on the following examples and other variations as to how the tool is used:

- How the tool is used and the materials being cut or drilled.
- The tool being in good condition and well maintained. Using the correct accessory for the tool and ensuring it is sharp and in good condition.
- The tightness of the grip on the handles and if any anti vibration accessories are used.
- The tool is being used as intended by its design and these instructions.
- This tool may cause hand-arm vibration syndrome if its use is not adequately managed.

WARNING: To be accurate, an estimation of exposure level in the actual conditions of use, should also take into account all parts of the operating cycle. Such as the times when the tool is switched off and when it is running idle but not actually doing the job. This may significantly reduce the exposure level over the total working period.

Helping to minimise your vibration exposure risk.
ALWAYS use sharp chisels, drills and blades.
Maintain this lawn mower in accordance with these instructions and keep well lubricated (where appropriate).
If the tool is to be used regularly then invest in anti-vibration accessories.
Plan your work schedule to spread any high vibration tool use across a number of days.

RECYCLING AND DISPOSAL

Waste electrical products should not be disposed with household waste. Please recycle where facilities exist.

Check with your local authority or retailer for recycling advice.

GETTING HELP

Our dedicated UK-based customer helpline is open 7 days a week to assist you with assembly, parts queries and technical support. We are open during office hours but you can always send an email via **support@coreservice.co.uk**. Our experts are here to get you back enjoying your garden in no time.

For useful assembly, starting and maintenance videos, and for ordering spares, please visit **www.coreservice.co.uk.**

Using our service does not affect your statutory rights.

WARRANTY

This product is covered by a 1 year warranty.

The warranty covers any manufacturing defect in materials, workmanship and finish.

Any claim under this warranty must be made by going to your nearest Homebase store, taking your proof of purchase with you, and claims must be made within 1 year of the date of purchase.

We will offer you a free repair of the item where this is possible, or a replacement or a refund. Your statutory rights remain unaffected, in particular, any rights you may have under the Consumer Rights Act 2015.

This warranty is given by HHGL Limited, MK9 1BA; HHGL (ROI) Limited, D02 X576

Please note: This warranty does not apply to products misused or neglected and only covers domestic use. It does not apply to commercial use of the product.